28.25

15.5

25.5

14.0

18.00

6.0

15.0

15.0

48

11.75

8

6.0

20.65

25.0

⌀5.0

11

5.0

22.38

13.95

23.33

19.29

30.30

96

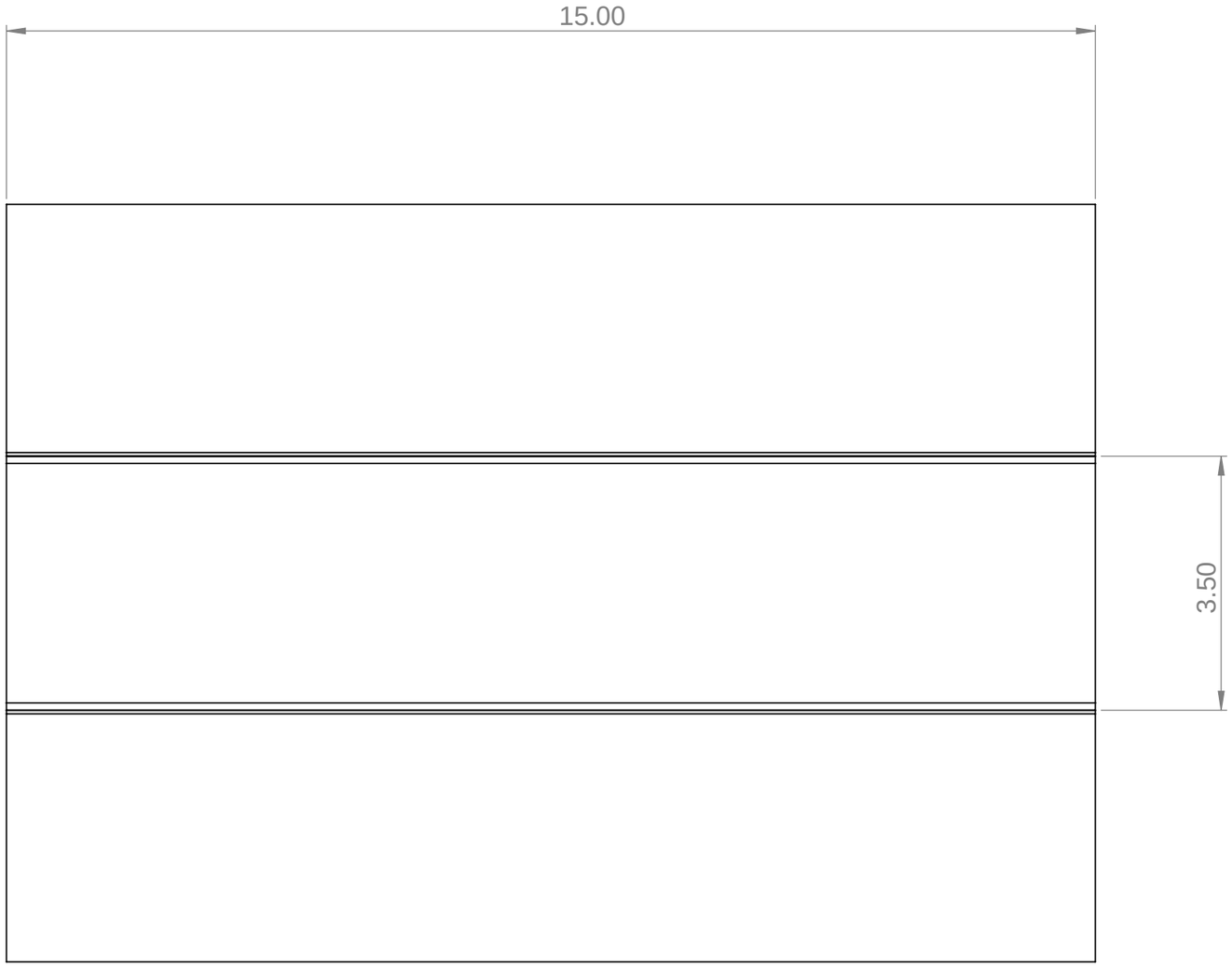

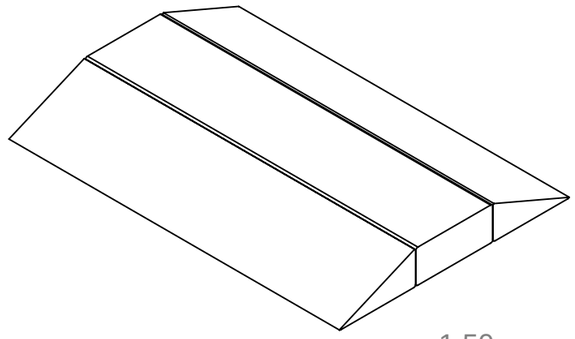

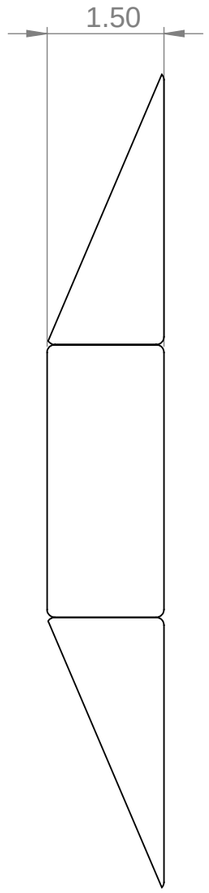

UNLESS OTHERWISE SPECIFIED: DIMENSIONS ARE IN MILLIMETERS SURFACE FINISH: TOLERANCES: LINEAR: ANGULAR:	FINISH:				DEBUR AND BREAK SHARP EDGES	DO NOT SCALE DRAWING / REVISION
	NAME	SIGNATURE	DATE			Mindstrom Lego Competition 2017 Wonder W an - Ramp
DRAWN						Wendi Brooking Gary Brooking
CHK'D						
APPV'D						
MFG						
Q.A				MATERIAL:		DWG NO. Ramp for Wonder W an — A3
				WEIGHT:		SCALE:1:5 — SHEET 1 OF 1